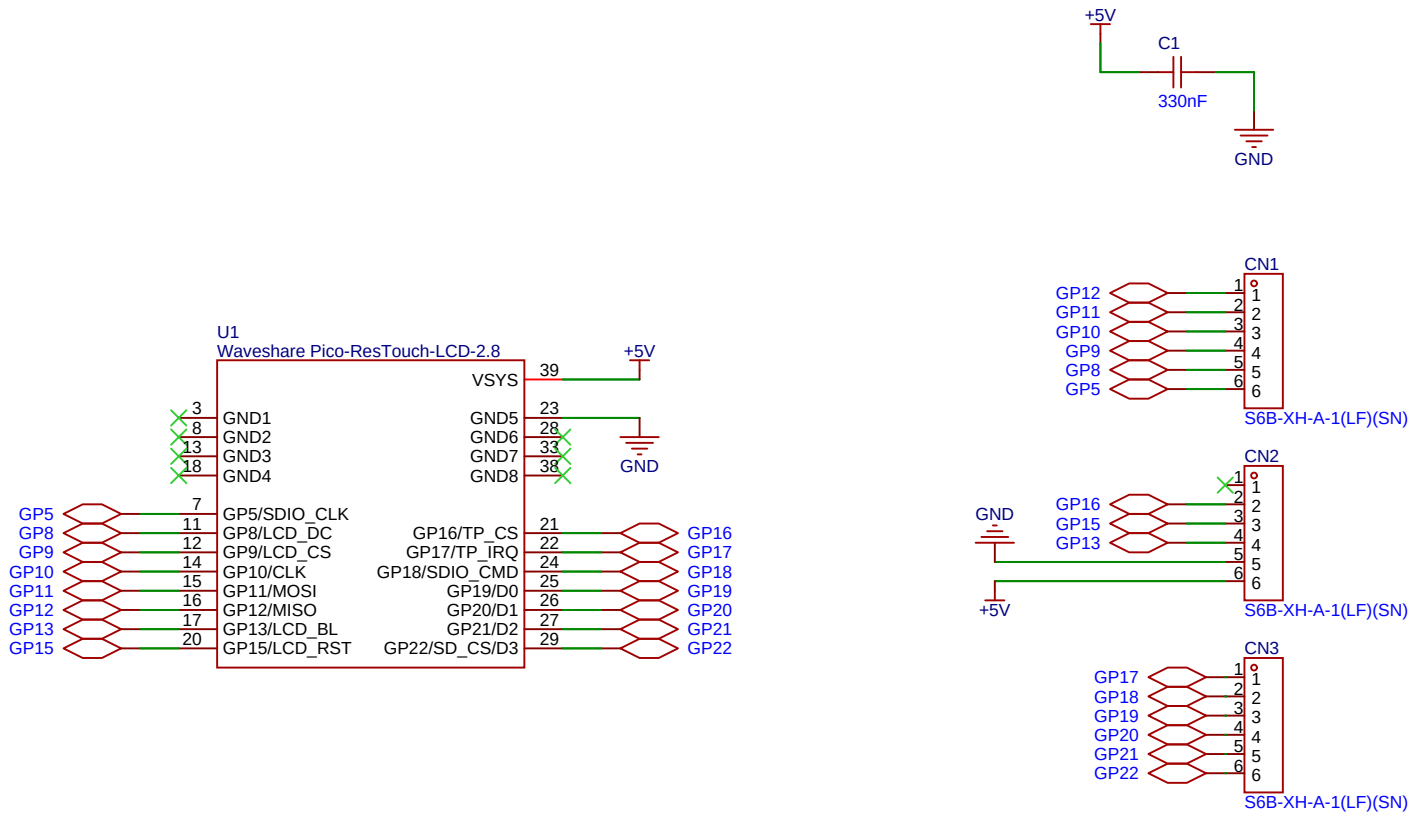

Schematic	Volant - Displej	Update Date	2025-03-03
		Create Date	2024-08-02
Page	P1	Part Number	d_14_01
Drawn	Patrik voma	AF-23	
Reviewed			
		VER	SIZE	PAGE 1 OF 1
EasyEDA		v1.1	A4	SP ár nad Sázavou